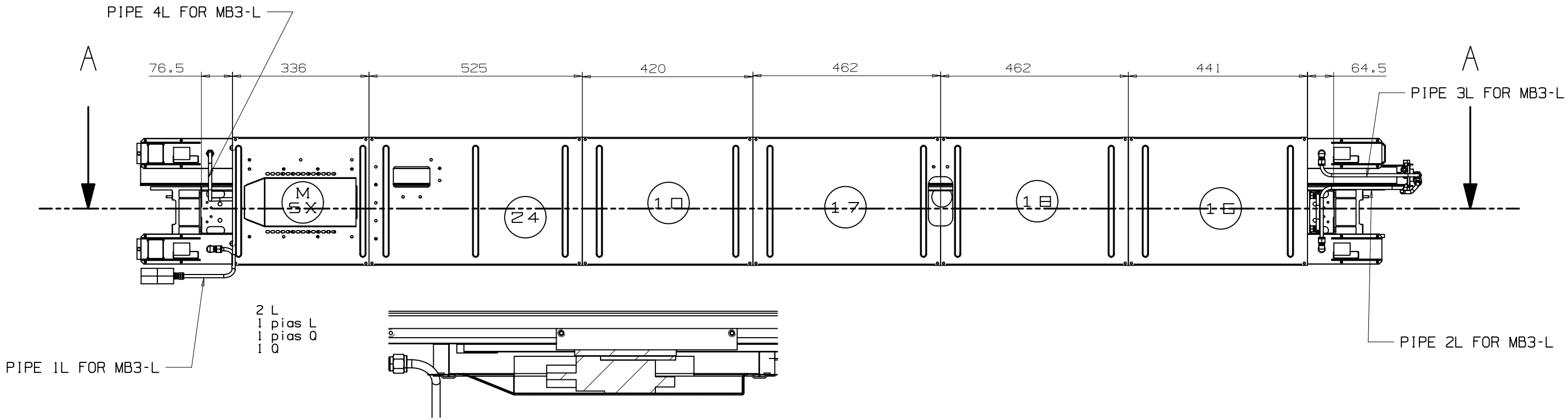
PIPE 4L FOR MB3-L
A
76.5
336
525
420
462
462
441
64.5
A
PIPE 3L FOR MB3-L
M
5X
24
10
17
18
16
2 L
1 pias L
1 pias Q
1 Q
PIPE 1L FOR MB3-L
PIPE 2L FOR MB3-L

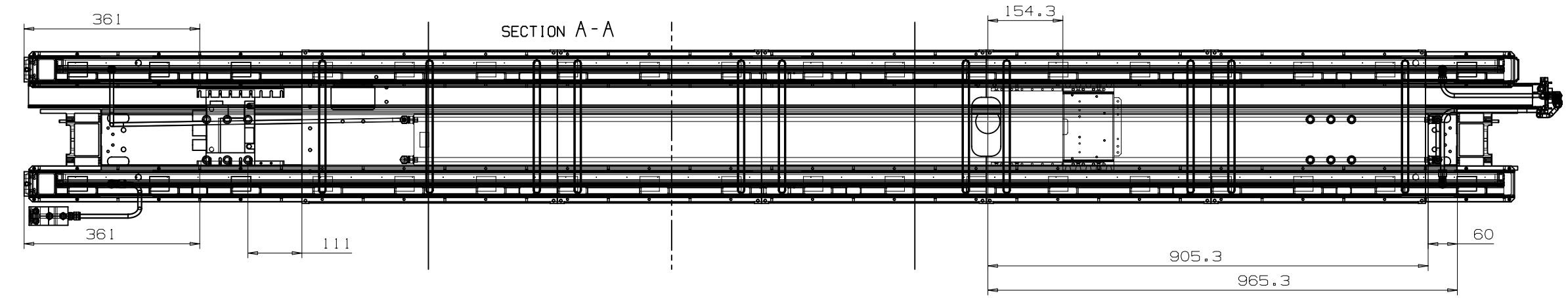
361
SECTION A-A
154.3
361
111
60
905.3
965.3

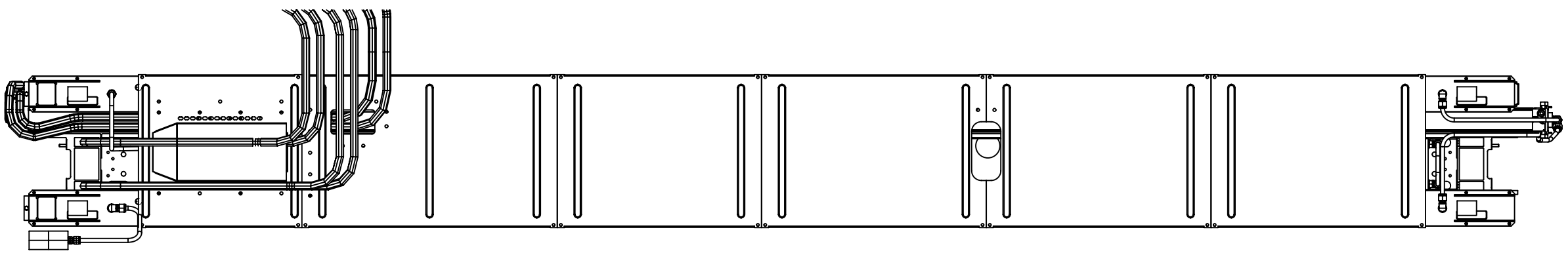

MB3- L
040916