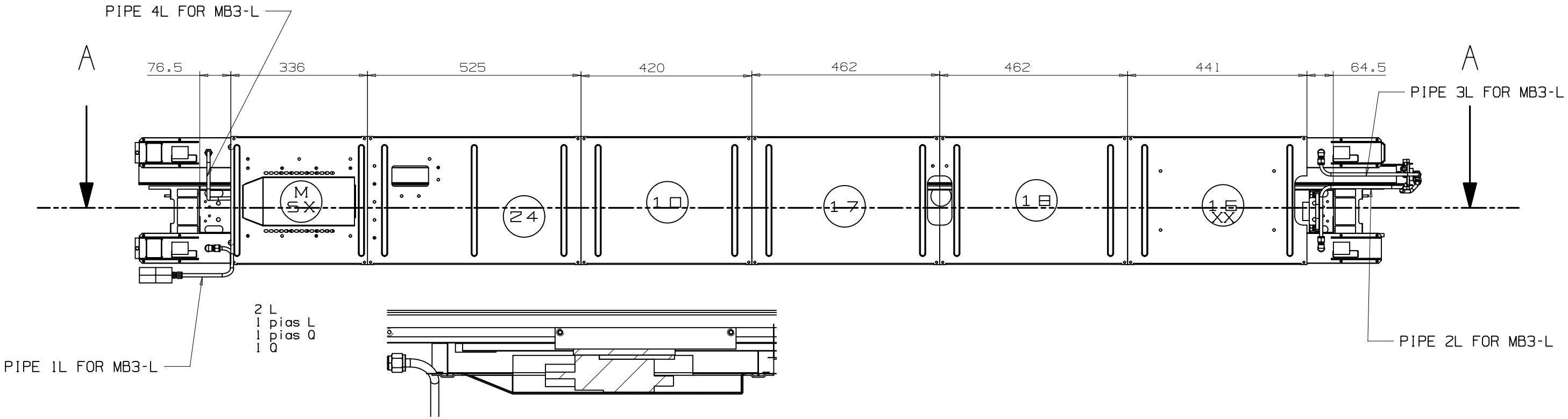

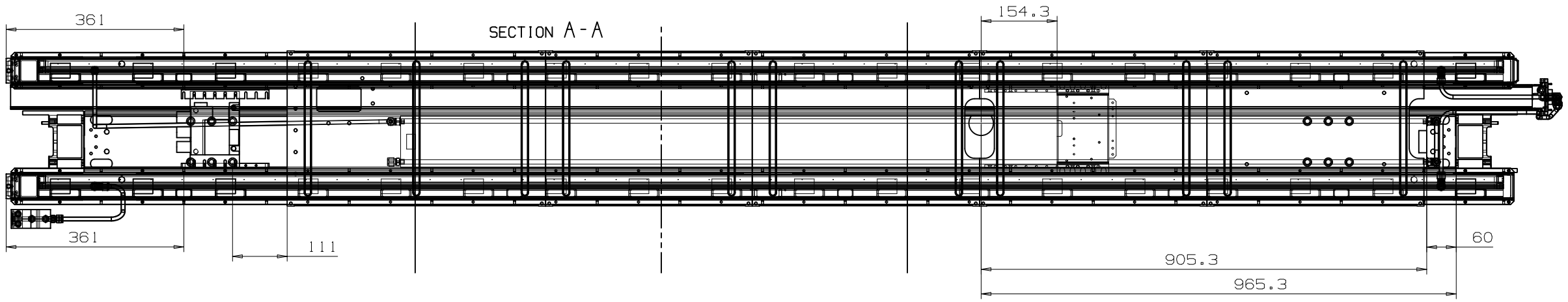

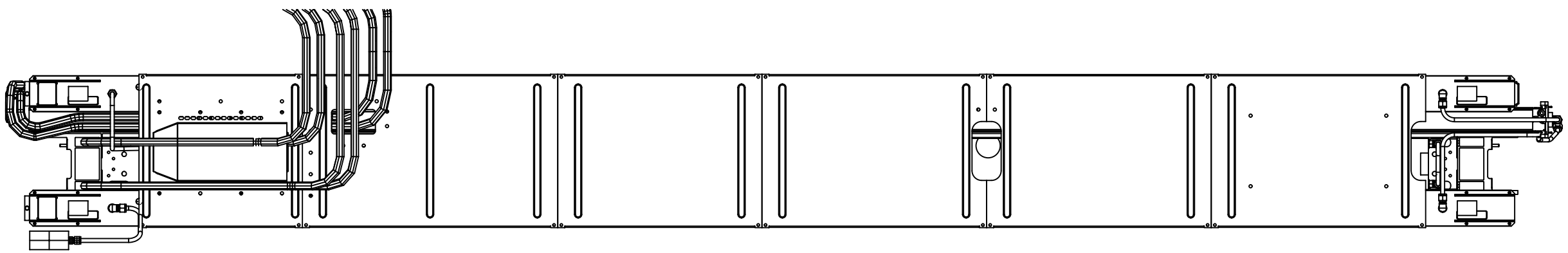

MB3- L
050620

User: zago Node: xputcad2 Job: 030930_mb3_-2_3_4_phi_L_carters
Drawing: PHI Part: 030930_mb3_-2_3_4_phi_L_carters Date: 23-Jun-05 Time: 17:08
Message: