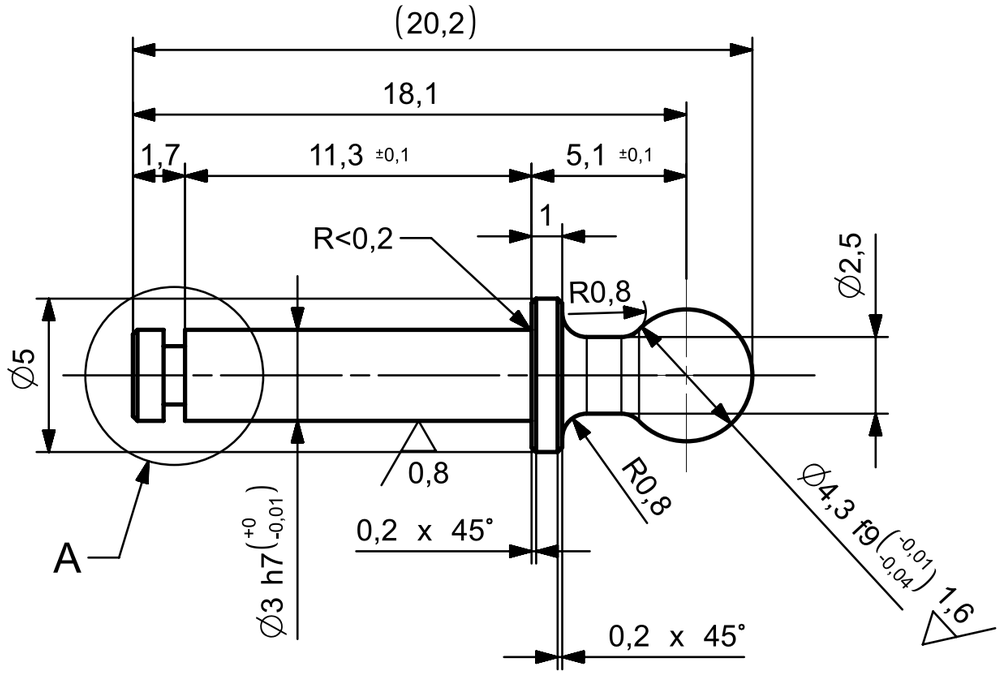

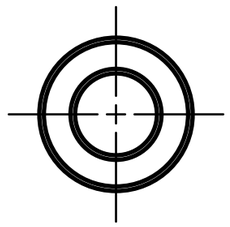

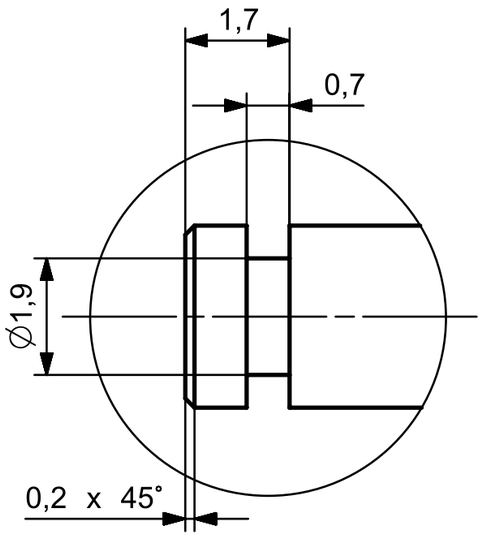

DETAIL A
SCALE 10:1

Heat and/or Surface Treatment	Material	Not declared chamfers	Roughness in mm	Quantity
-	AS IN REQUEST	-	3,2	-

Date(dd/mm/yy)	Drawn by	TOLERANCING ISO 8015 Ⓔ (Envelope Principle)
13/11/2023	Matteo Turcato	UNLESS OTHERWISE SPECIFIED ⌓ 0.1 A B C APPLIES TO ALL SURFACES
	Checked by: Massimo Benettoni	ALL DIMENSIONS SPECIFIED IN MILLIMITERS

THIS DRAWING IS THE PROPERTY OF INFN AND MAY NOT BE COPIED OR USED FOR ANY PURPOSE OTHER THAN THAT FOR WHICH IT IS SUPPLIED WITHOUT THE EXPRESS WRITTEN AUTHORITY OF INFN.

INFN PADOVA
Servizio Progettazione Meccanica
Via Marzolo, 8
35131 Padova
ITALY

Title: **ROLLER (ROLLER BLOCK)**

Scale: **5:1**

Drawing no.: **CMS.BTL.00000121**

Sheet: **1**