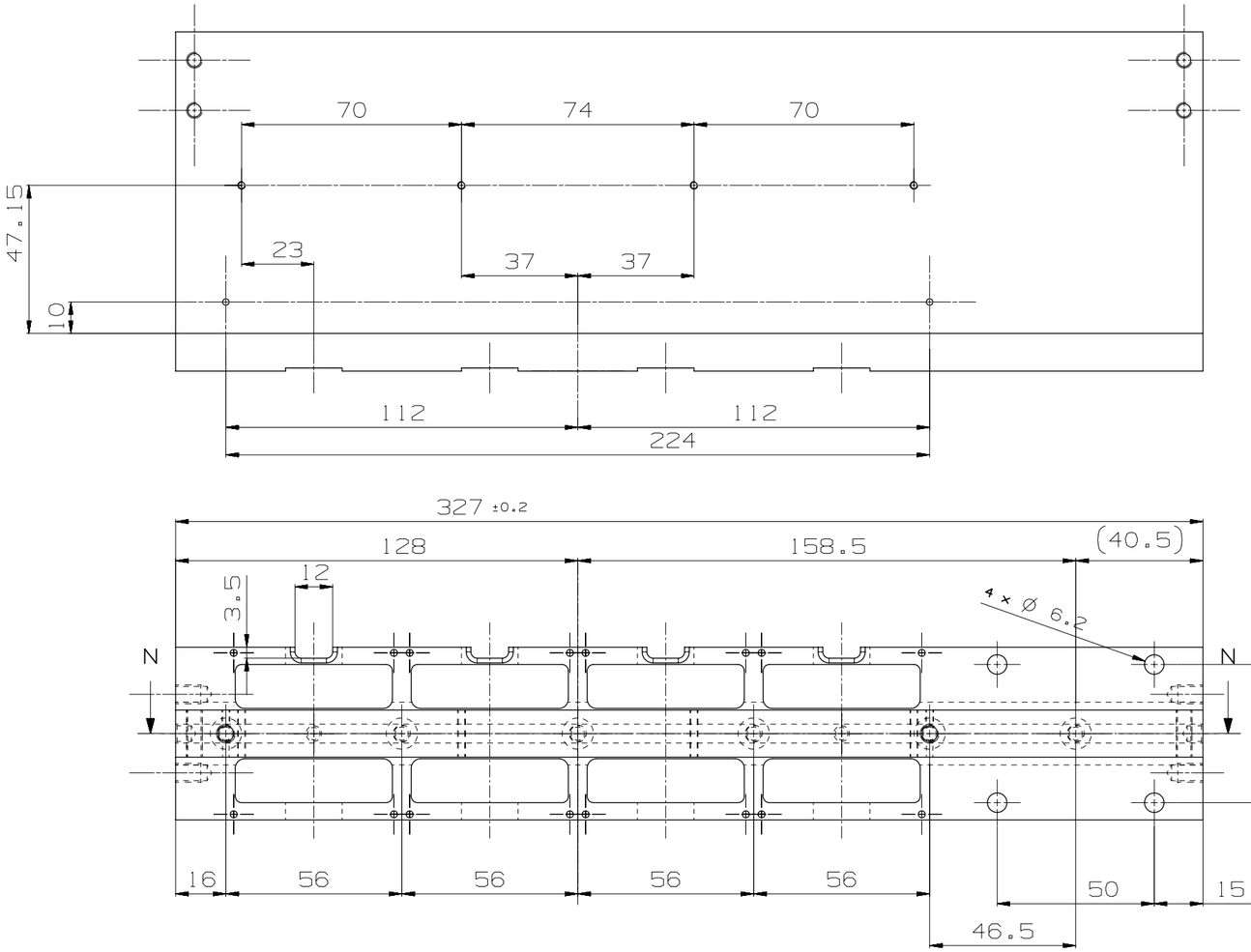


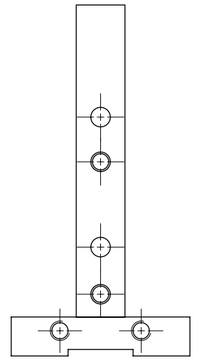

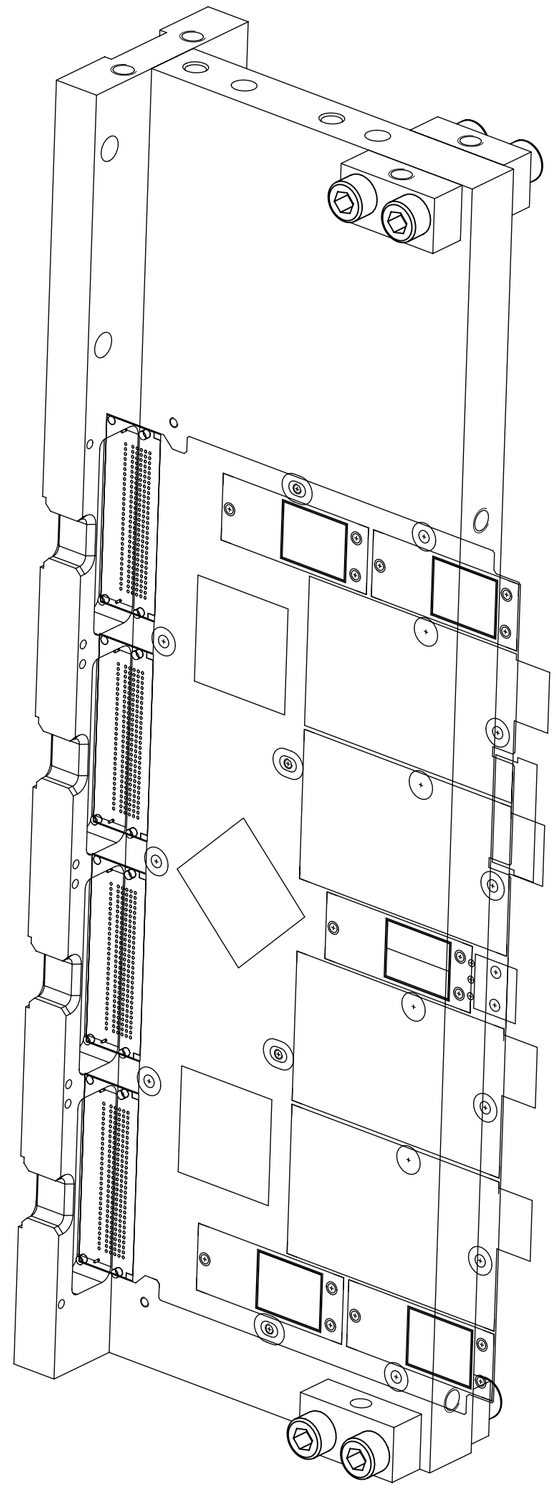

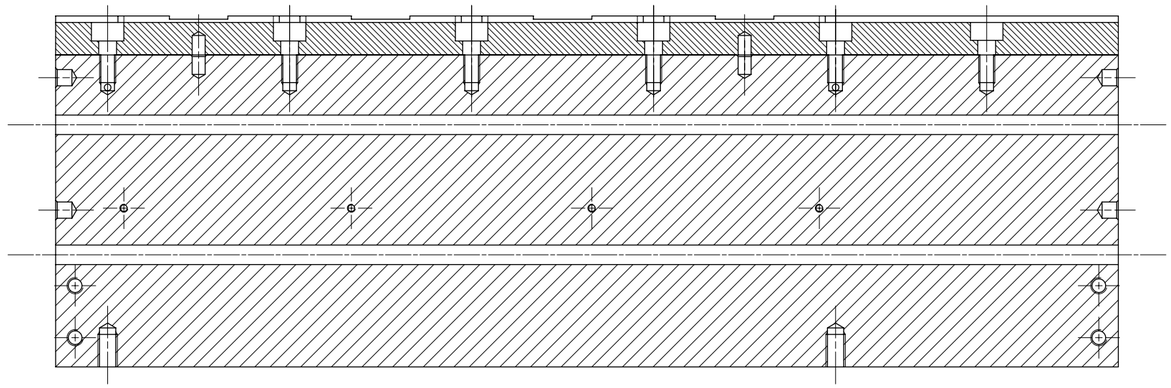

SECTION N-N

28 nov 2017