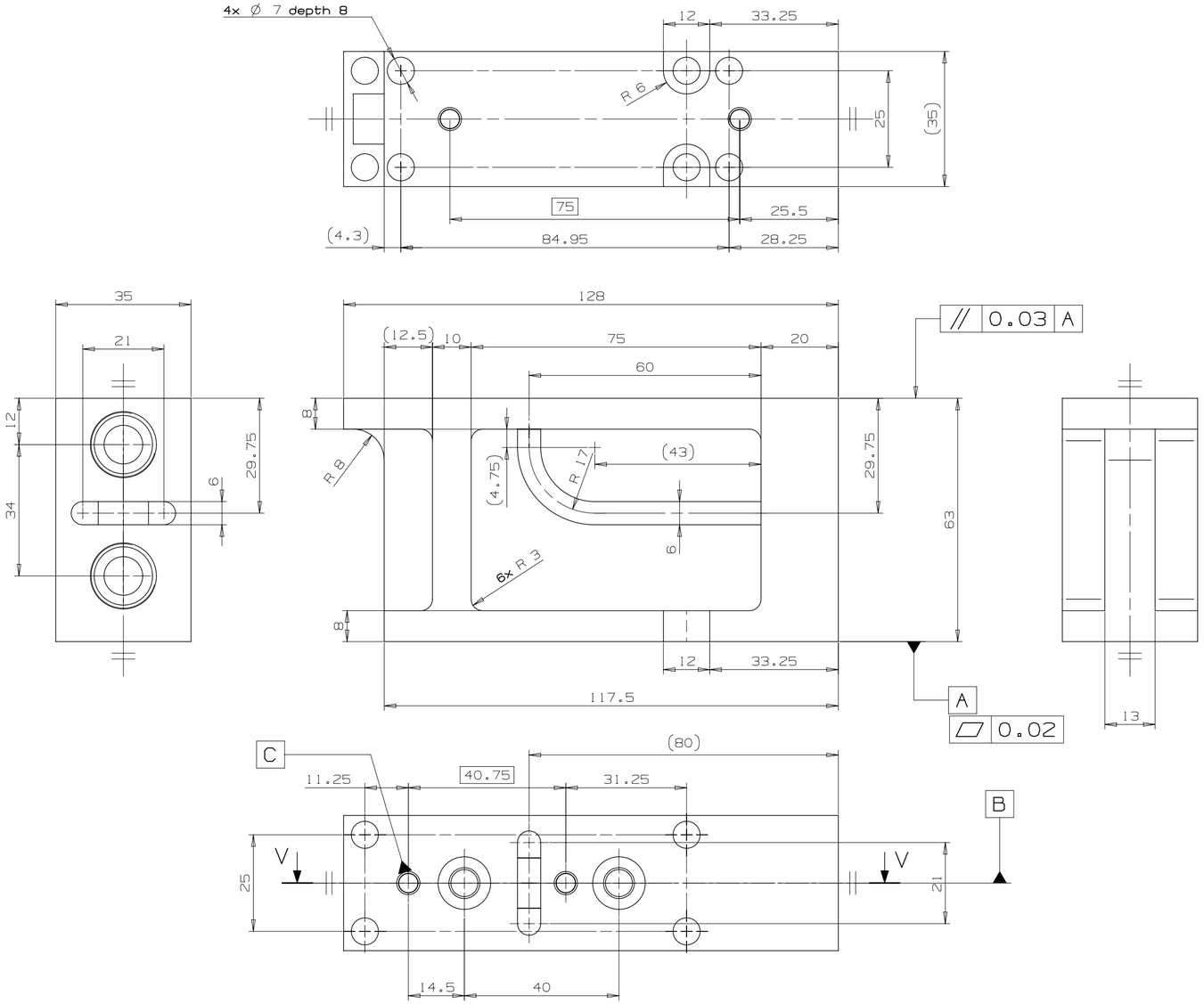

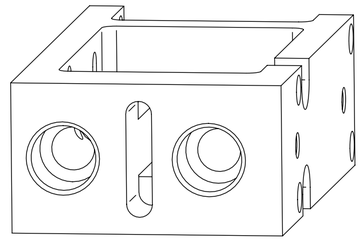

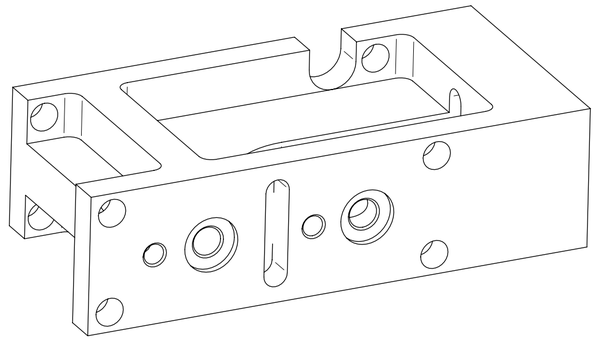

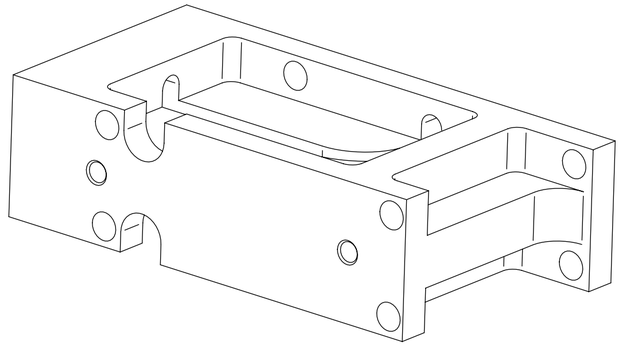

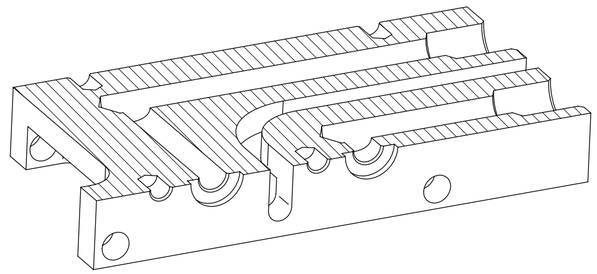

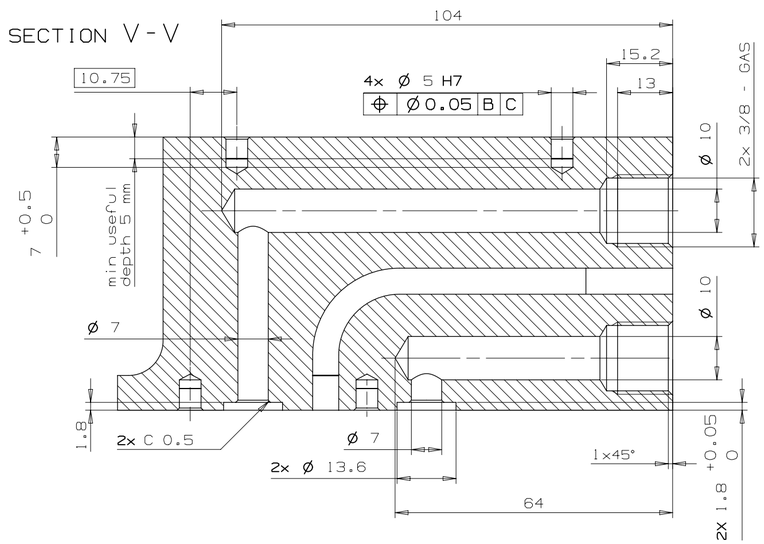

REFERENCE SET:
Primary: face A
Secondary: line B between H7 holes on face A
Tertiary: intersection point between hole C and face A

file 2018_LHCB\171117_NEO\190319_BAR_00_AS_DRAFT_GAS

Heat and/or Surface Treatment: Black anodized 20 um	MATERIAL: AW 6082		Chamfer not dimensioned: 45° x 0.5	ROUGHNESS R_a in µm: 3.2 (xx xx)	QUANTITY: 30
DATE: 17/05/19	OVERALL TOLERANCES: ± 0.1			SCALE: - -	
Drawn: M. Zago					
INFN Physics Department Galileo Galilei Marzolo str. no. 8 35141 Padua, Italy Tel.: +39 049 8277007 Fax: +39 049 8277031 Uff. TECNICO CAD MECCANICO PADUA Division	TITLE: BOTTOM BLOCK				
The current drawing, in accordance with the law, is INFN property. It cannot be copied, multiplied or used by third	DRAWING No.: 1904.BAR.GC.001				SHEET: 1