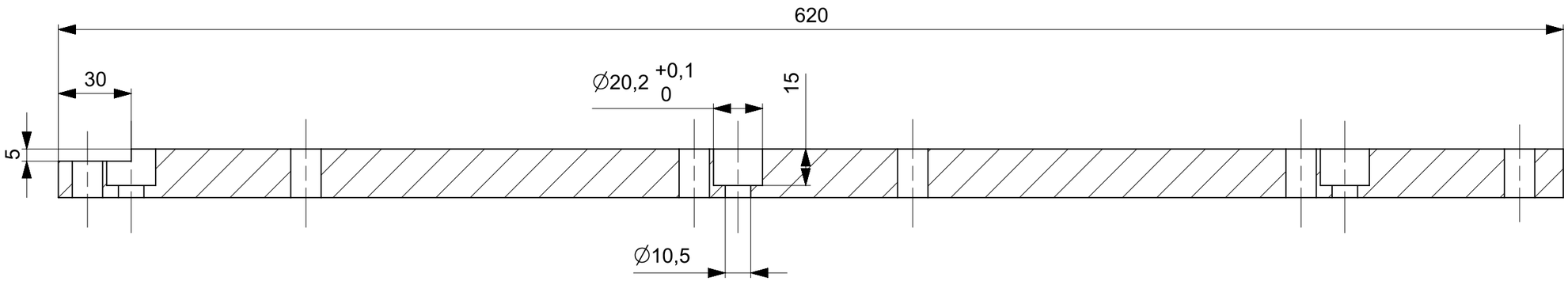

SECTION A-A

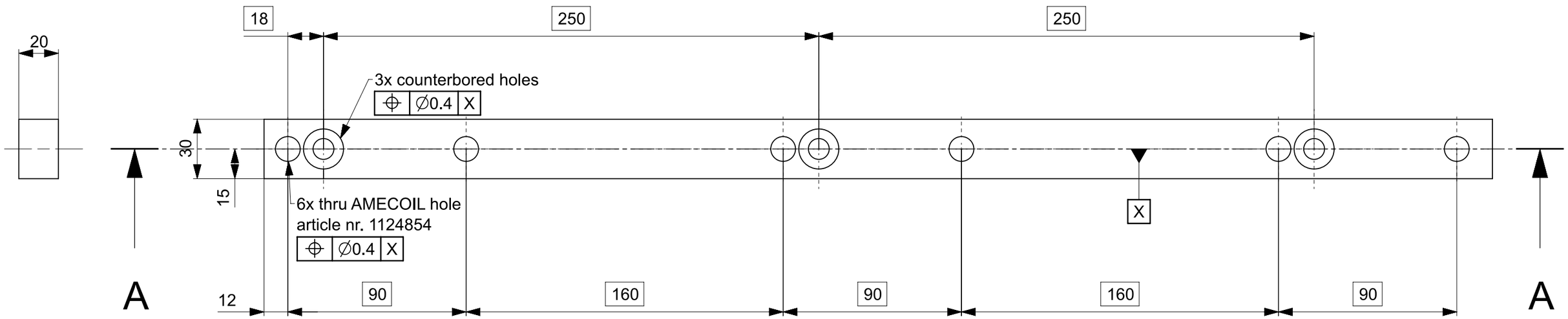

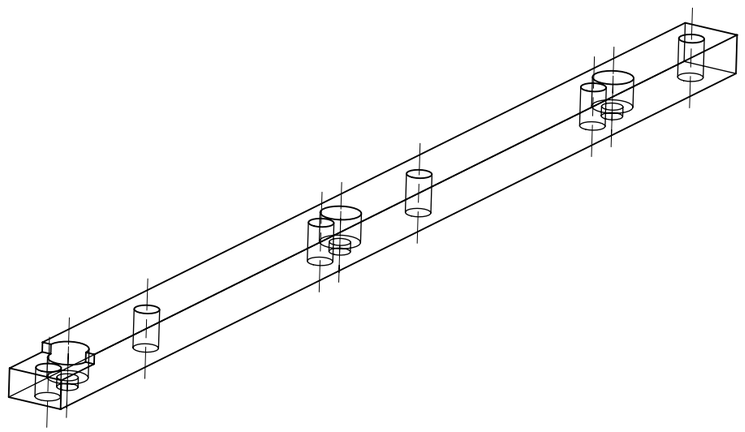

Heat and/or Surface Treatment	MATERIAL	Chamfer not dimensioned	ROUGHNESS R_a in µm	QUANTITY
---	Drawn aluminium	0.5x45°	xx / (xx xx)	5

DATE	08/09/2020	GENERAL TOLERANCES	Dimensions mm	≤6	> 6	> 30	> 120	> 315	>1000	>2000	Shaft	h12	SCALE	
			Precision Class UNI 5303	± 0.1	± 0.2	± 0.3	± 0.5	± 0.8	± 1.2	± 2			1:2	
Drawn	Benettoni - Bez		Angular dimensions in mm	> 3 ÷ 6		> 6 ÷ 30	> 30 ÷ 120		> 120		Hole	H12		
			Precision Class UNI 5307	±1°		±10'	±20'		±30'					

INFN
Uff. TECNICO CAD MECCANICO
PADUA Division
Physics Department
Galileo Galilei
Marzolo str. no. 8
35141 Padua, Italy
Tel.: +39 049 8277007
Fax: +39 049 8277031

The current drawing, in accordance with the law, is INFN property
It cannot be copied, multiplied or used by third

TITLE: 060_PRESS_01_v2

DRAWING No.: pressa_01

SHEET: 1