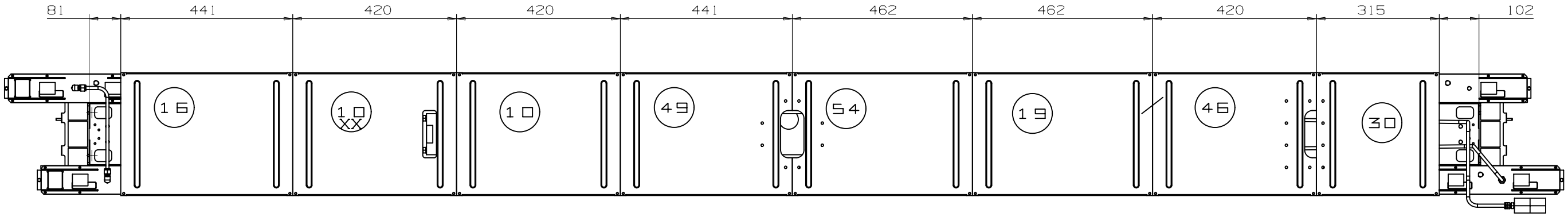

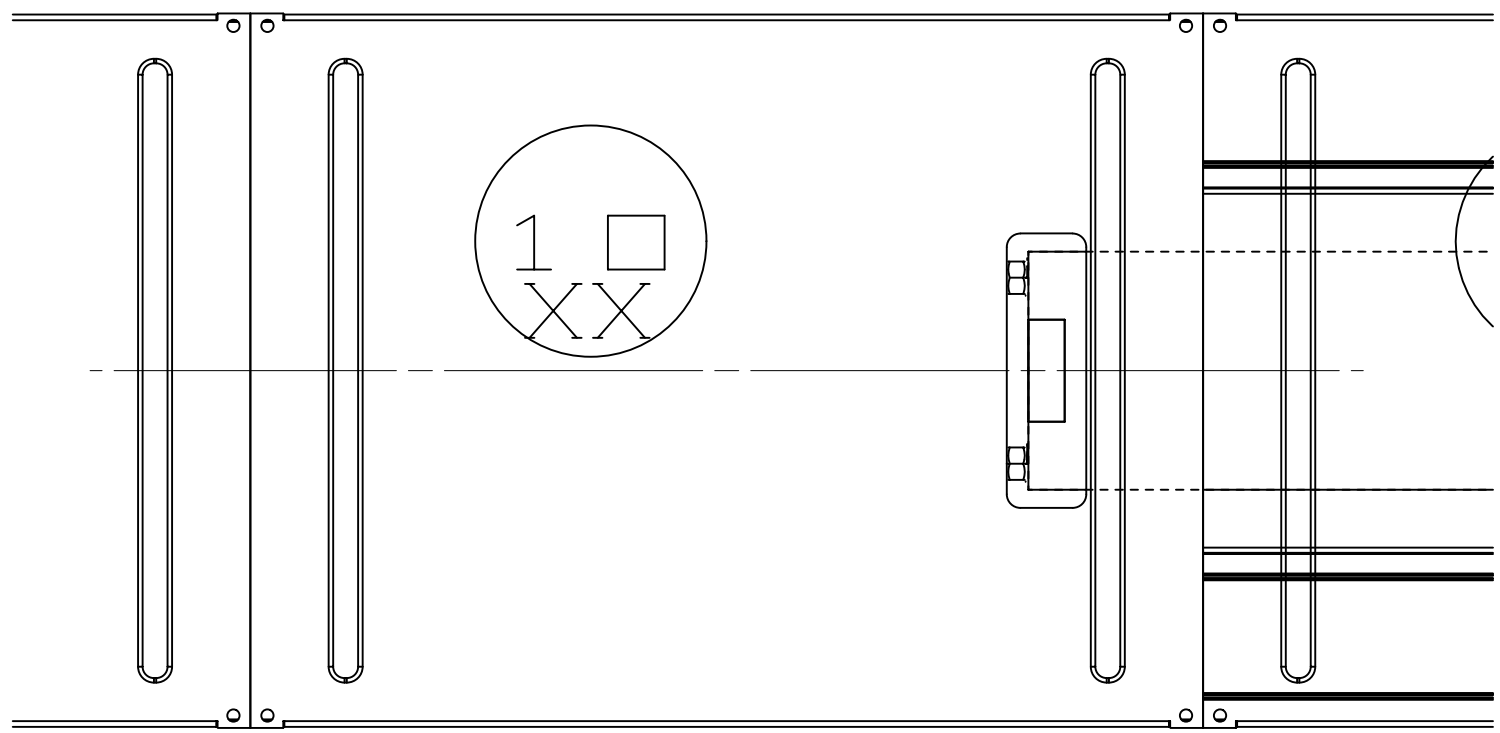

10XX sostituisce il 10

Dimensioni e Quantita' Vedi
Tavola 4-8 dx R

MB 4-8 sx R
050508

User: zago Node: xputcad2 Job: 040209_mb48_2_4_8_sx_phi_R_carters
Drawing: carter MC protrude Part: 040209_mb48_2_4_8_sx_phi_R_carters Date: 09-May-05 Time: 15:34
Message: