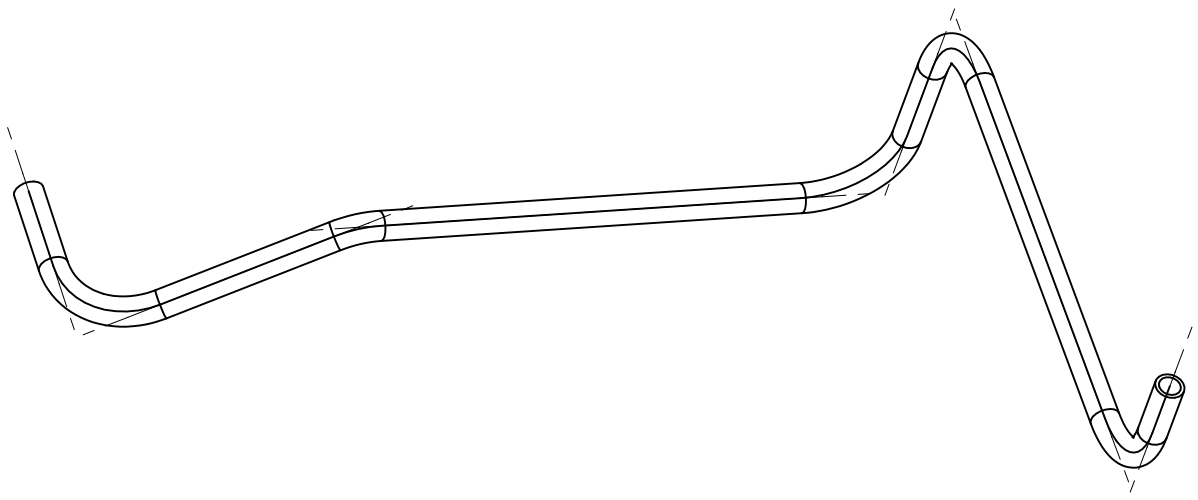

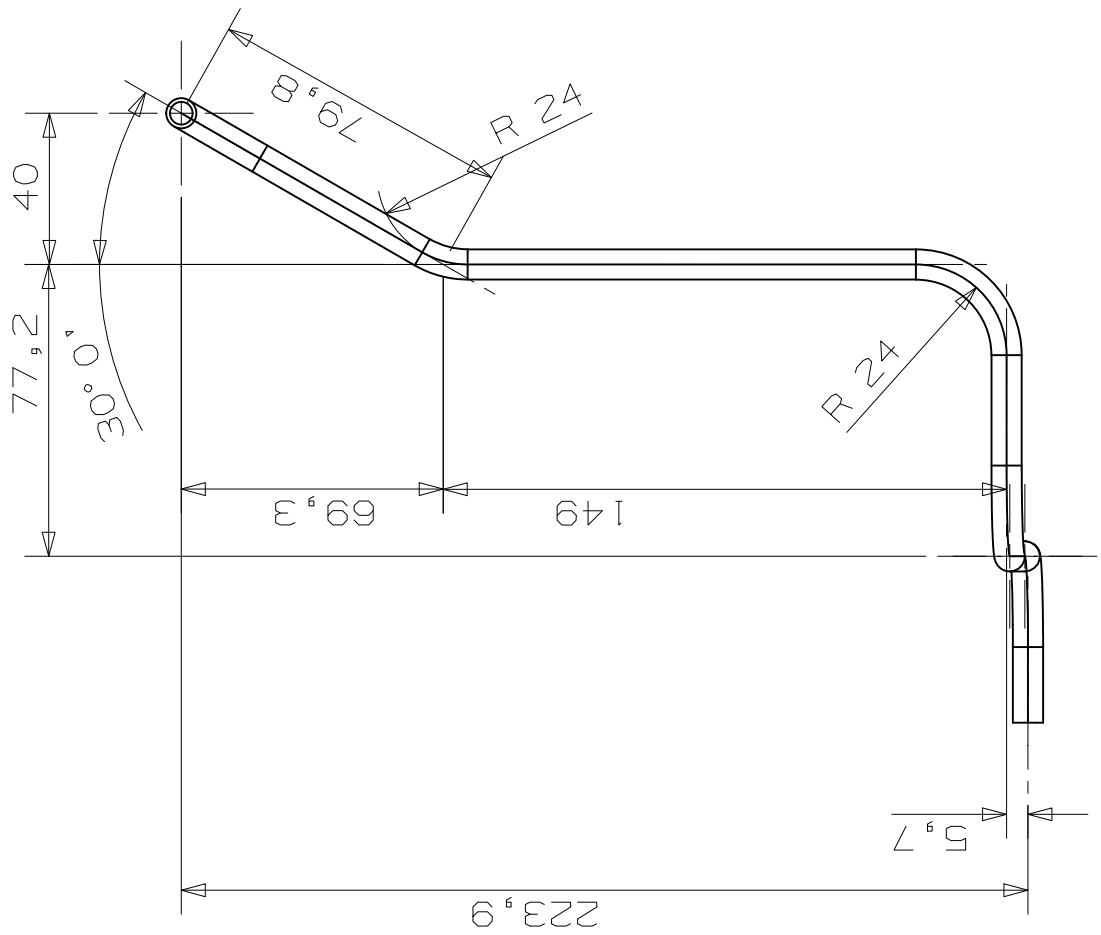

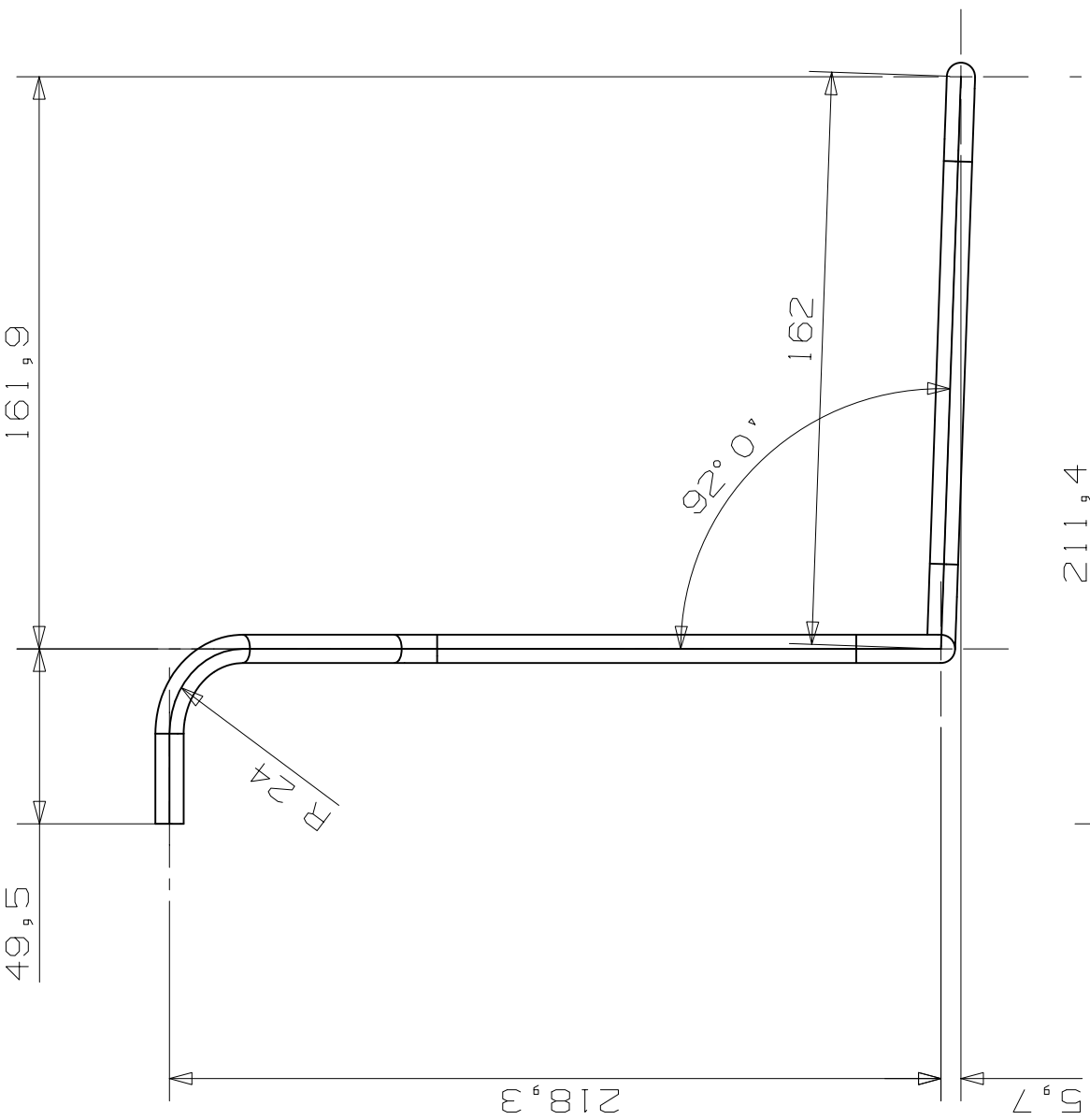

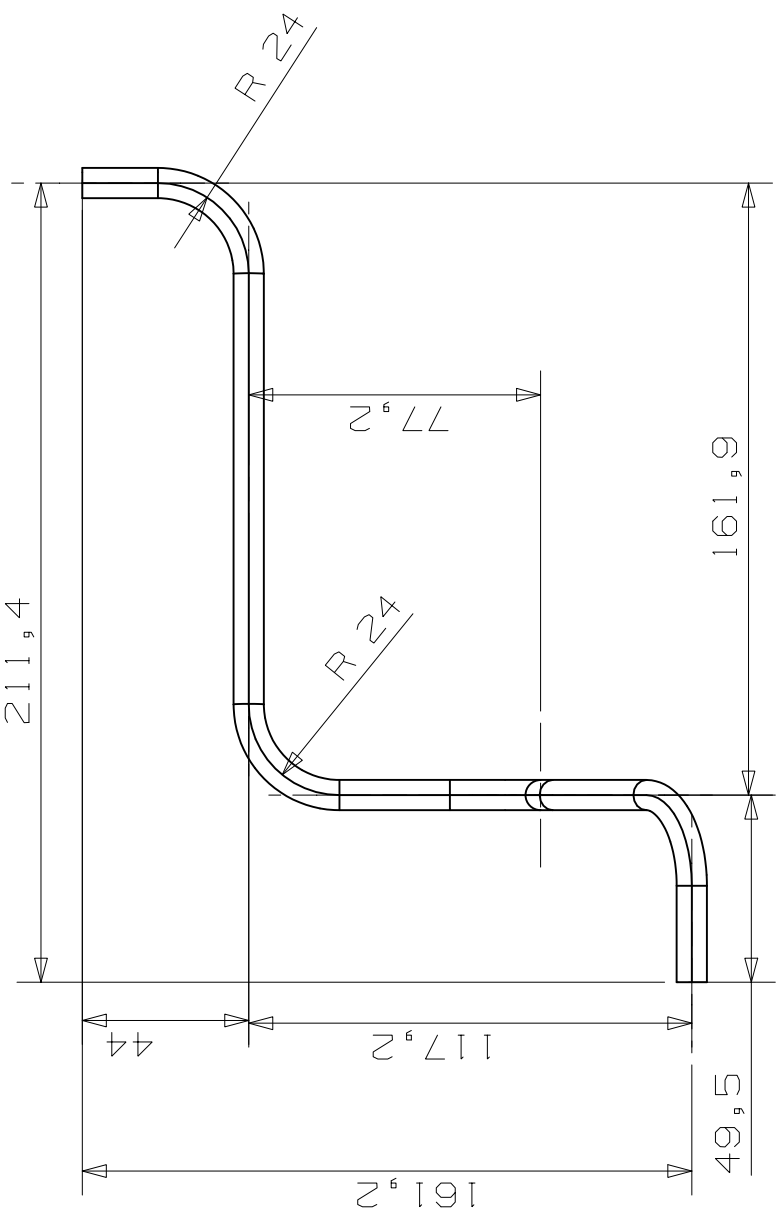

IND.	DATE	NOM/NAME	ZONE	MODIFICATION

DES/DRA.	0 04 03 05 15 0 0 K 1 8 3 0
CONTROLLED	
RELEASED	
APPROVED	
REMPLACE/REPLACES	
ECHELLE SCALE	
SIZE	
IND.	

MB4/10sx Right Pipe

QAC

NON VALABLE POUR EXECUTION
NOT VALID FOR EXECUTION

CERN

GENERAL TOLERANCES GENERALES	DIMENSION	<=6	> 6	> 30	> 120	> 315	>1000	>2000
	USINAGE MOYEN/MEDIUM MACHINING	± 0.1	± 0.2	± 0.3	± 0.5	± 0.8	± 1.2	± 2
	MECANO. SOUDURE/WELDED STRUCTURE	± 0.5	± 1	± 2	± 3	± 5	± 7	± 10

DESSIN, RUGOSITE, TOLERANCES
SELON NORMES ISO
DRAWING, RUGOSITY, TOLERANCES
ACCORDING TO ISO STANDARDS

PROJECTION

Ce dessin ne peut etre utilise a des fins commerciales sans autorisation ecrite
This drawing may not be used for commercial purposes without written authorisation

ORGANISATION EUROPEENNE POUR
LA RECHERCHE NUCLEAIRE
EUROPEAN ORGANIZATION FOR NUCLEAR RESEARCH
GENEVE

CERN