| GENERAL TOLERANCES GENERALES | DIMENSION | <=6 | > 6 | > 30 | > 120 | > 315 | >1000 | >2000 |
|---|---|---|---|---|---|---|---|---|
| | USINAGE MOYEN/MEDIUM MACHINING | ± 0.1 | ± 0.2 | ± 0.3 | ± 0.5 | ± 0.8 | ± 1.2 | ± 2 |
| | MECANO. SOUDURE/WELDED STRUCTURE | ± 0.5 | ± 1 | ± 2 | ± 3 | ± 5 | ± 7 | ± 10 |

DESSIN, RUGOSITE, TOLERANCES SELON NORMES ISO
DRAWING, RUGOSITY, TOLERANCES ACCORDING TO ISO STANDARDS

PROJECTION

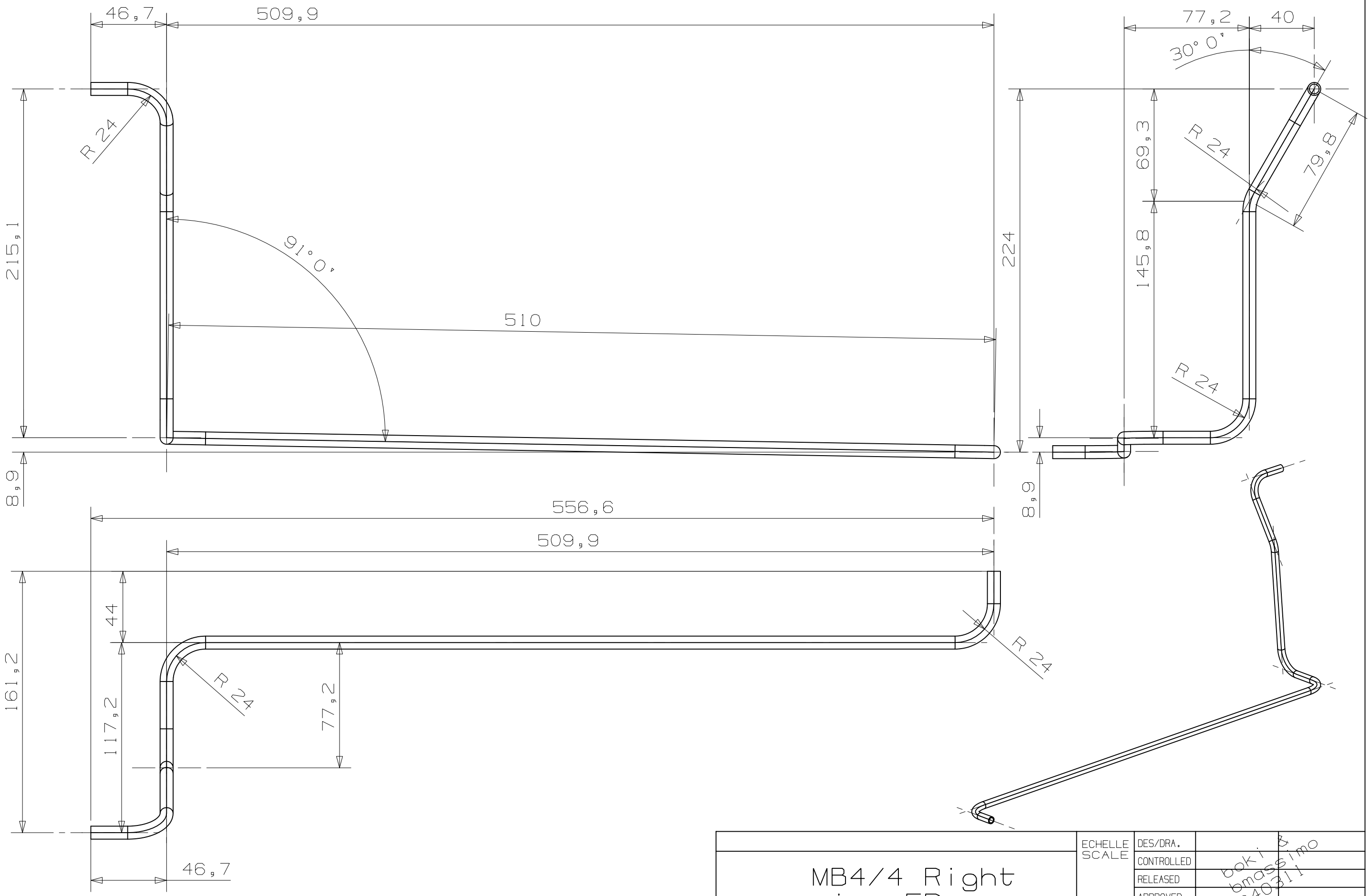



ORGANISATION EUROPEENNE POUR LA RECHERCHE NUCLEAIRE
EUROPEAN ORGANIZATION FOR NUCLEAR RESEARCH
GENEVE



Ce dessin ne peut etre utilise a des fins commerciales sans autorisation ecrite
This drawing may not be used for commercial purposes without written authorisation


| IND. | DATE | NOM/NAME | ZONE | MODIFICATION |
|---|---|---|---|---|
| | | | | |
| | | | | |
| | | | | |

# MB4/4 Right pipe 5R

ECHELLE / SCALE

| | | |
|---|---|---|
| DES/DRA. | boki & bmassimo | 040311 |
| CONTROLLED | | |
| RELEASED | | |
| APPROVED | | |

REMPLACE/REPLACES

NON VALABLE POUR EXECUTION
NOT VALID FOR EXECUTION

QAC

SIZE

IND.