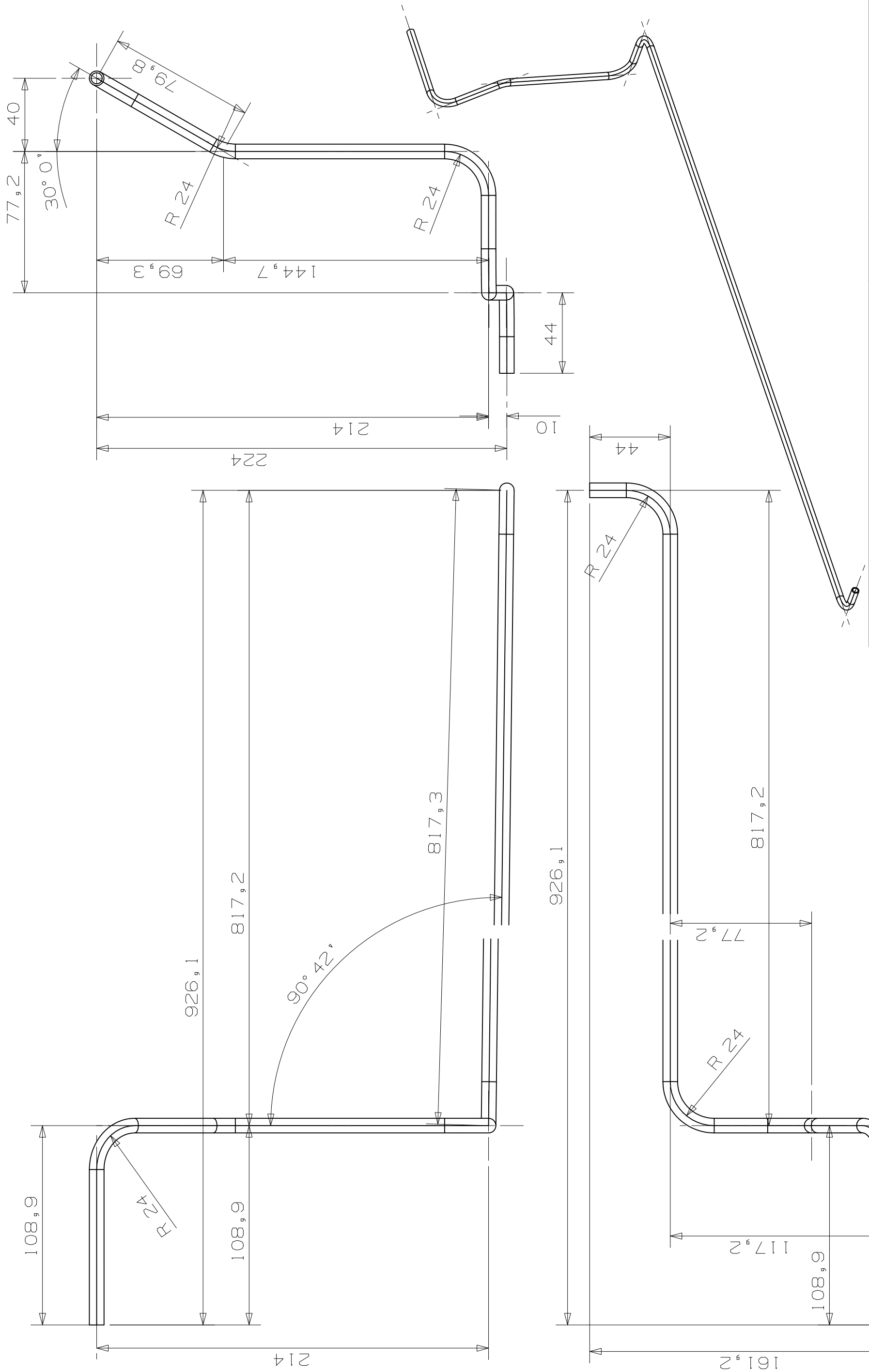

IND.	DATE	NOM/NAME	ZONE	MODIFICATION

DES/DRA.
CONTROLLED
RELEASED
APPROVED
ECHELLE SCALE
REMPLACE/REPLACES
SIZE
IND.
QAC

MB4/8,12sx Right pipe 5R

NON VALABLE POUR EXECUTION
NOT VALID FOR EXECUTION

ORGANISATION EUROPEENNE POUR LA RECHERCHE NUCLEAIRE
EUROPEAN ORGANIZATION FOR NUCLEAR RESEARCH
GENEVE

Ce dessin ne peut etre utilise a des fins commerciales sans autorisation ecrite
This drawing may not be used for commercial purposes without written authorisation

PROJECTION

DESSIN, RUGOSITE, TOLERANCES SELON NORMES ISO
DRAWING, RUGOSITY, TOLERANCES ACCORDING TO ISO STANDARDS

GENERAL TOLERANCES GENERALES	DIMENSION	<=6	> 6	> 30	> 120	> 315	>1000	>2000
	USINAGE MOYEN/MEDIUM MACHINING	± 0,1	± 0,2	± 0,3	± 0,5	± 0,8	± 1,2	± 2
	MECANO. SOUDURE/WELDED STRUCTURE	± 0,5	± 1	± 2	± 3	± 5	± 7	± 10