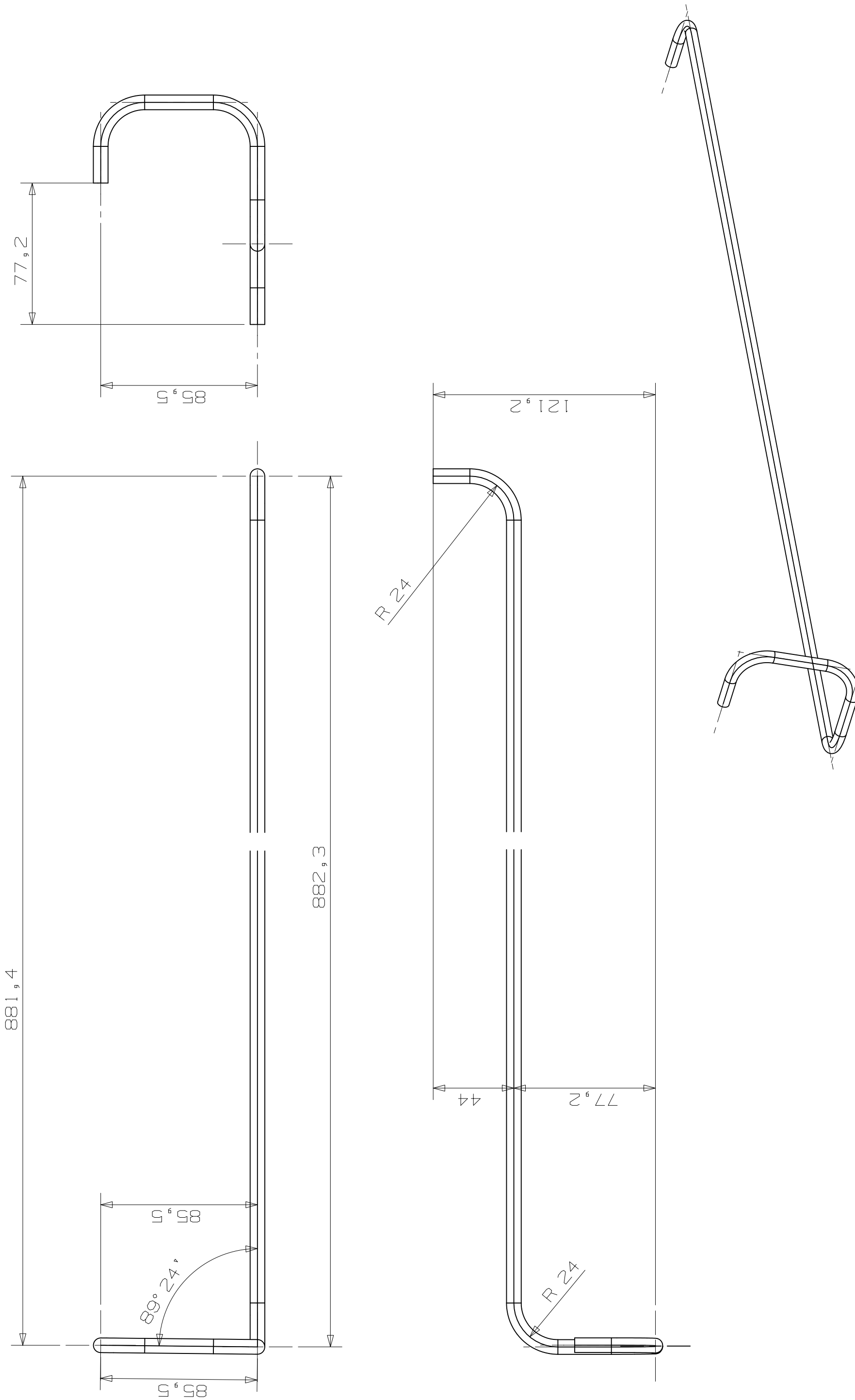

IND.	DATE	NOM/NAME	ZONE	MODIFICATION

ECHELLE SCALE	DES/DRA.
	CONTROLLED
	RELEASED
	APPROVED
	REMPLACE/REPLACES

SIZE | IND.

QAC

MB4dx Left
pipe 4L

NON VALABLE POUR EXECUTION
NOT VALID FOR EXECUTION

CERN

GENERAL TOLERANCES GENERALES	DIMENSION	<=6	> 6	> 30	> 120	> 315	>1000	>2000
	USINAGE MOYEN/MEDIUM MACHINING	± 0.1	± 0.2	± 0.3	± 0.5	± 0.8	± 1.2	± 2
	MECANO. SOUDURE/WELDED STRUCTURE	± 0.5	± 1	± 2	± 3	± 5	± 7	± 10

DESSIN, RUGOSITE, TOLERANCES
SELON NORMES ISO
DRAWING, RUGOSITY, TOLERANCES
ACCORDING TO ISO STANDARDS

PROJECTION

ORGANISATION EUROPEENNE POUR
LA RECHERCHE NUCLEAIRE
EUROPEAN ORGANIZATION FOR NUCLEAR RESEARCH
GENEVE

Ce dessin ne peut etre utilise a des fins commerciales sans autorisation ecrite
This drawing may not be used for commercial purposes without written authorisation