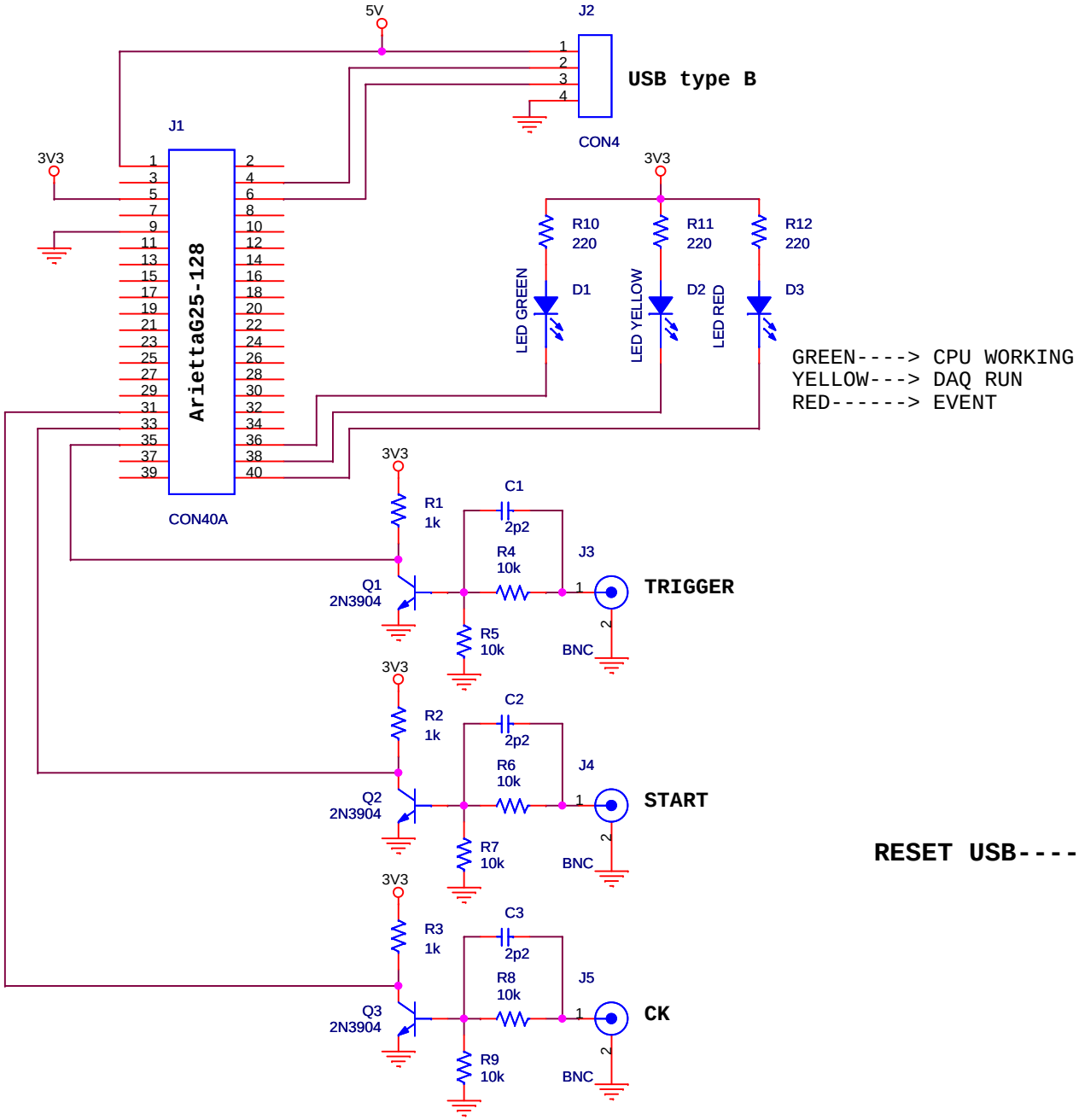

RESET USB-------->

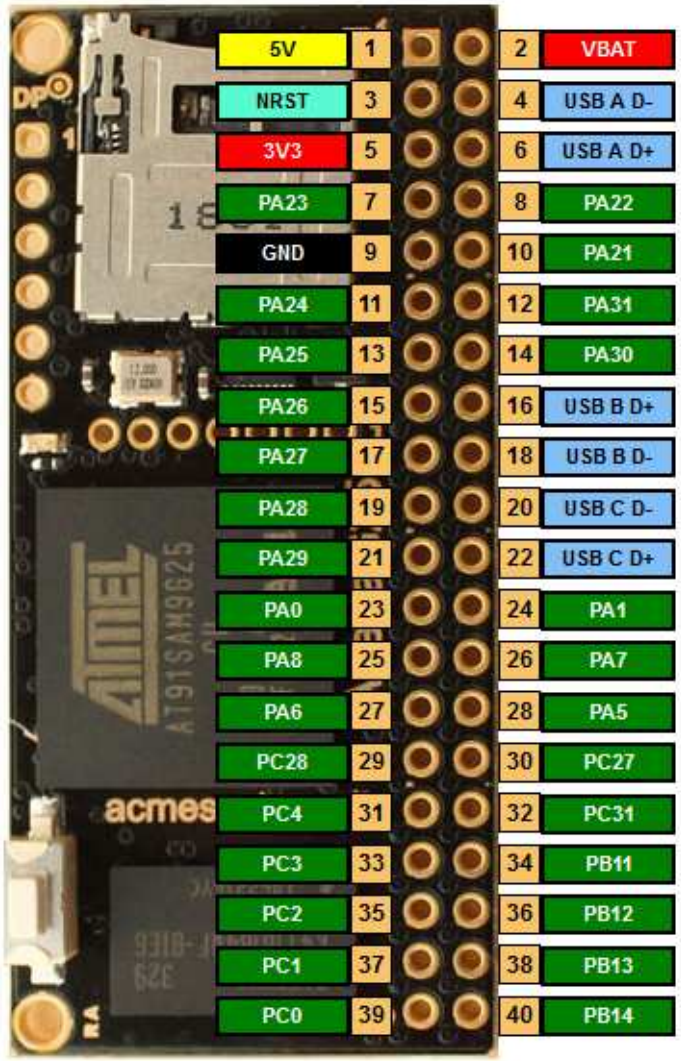

INFN sez. Padova by Lorenzo Castellani		
Title Multiscaler		
Size A4	Document Number	Rev 1.0
Date: Tuesday, January 12, 2016	Sheet 1 of 1	