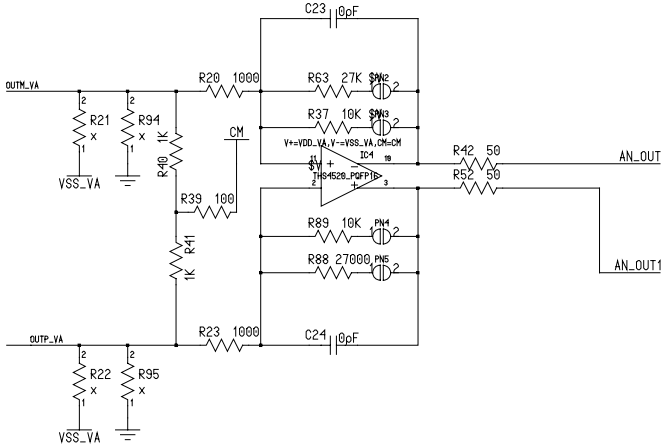

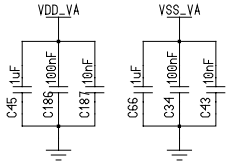

VA ANALOG OUTPUT

VA BIAS

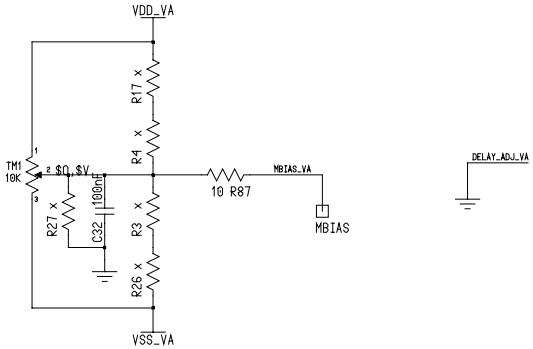

TA BIAS

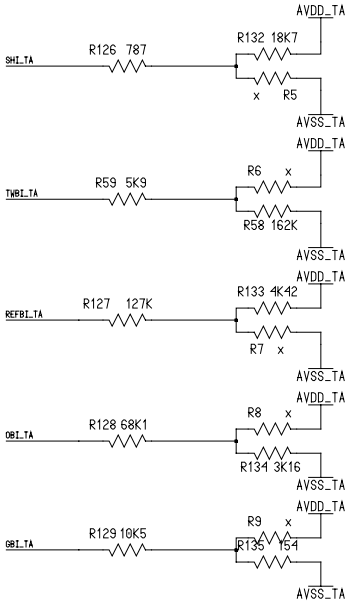

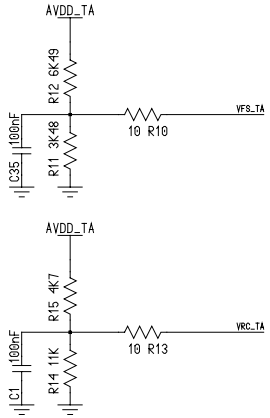

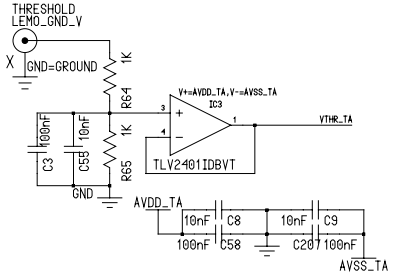

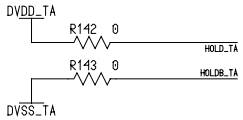

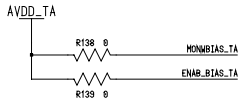

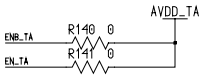

Engineer mbettini	INFN Sez. di PADOVA				
Drawn by mbettini					
R&D CHK	TITLE: EXOTIC_VaTa_NAPD Versione 1 x				Size A3
DOC CTRL CHK					
MFG ENGR CHK					
Changed by mbettini	Date Changed 02/09/2008	Time Changed	QA CHK	REV 0.0	Drawing Number MAB08002	Sheet 3 of 4