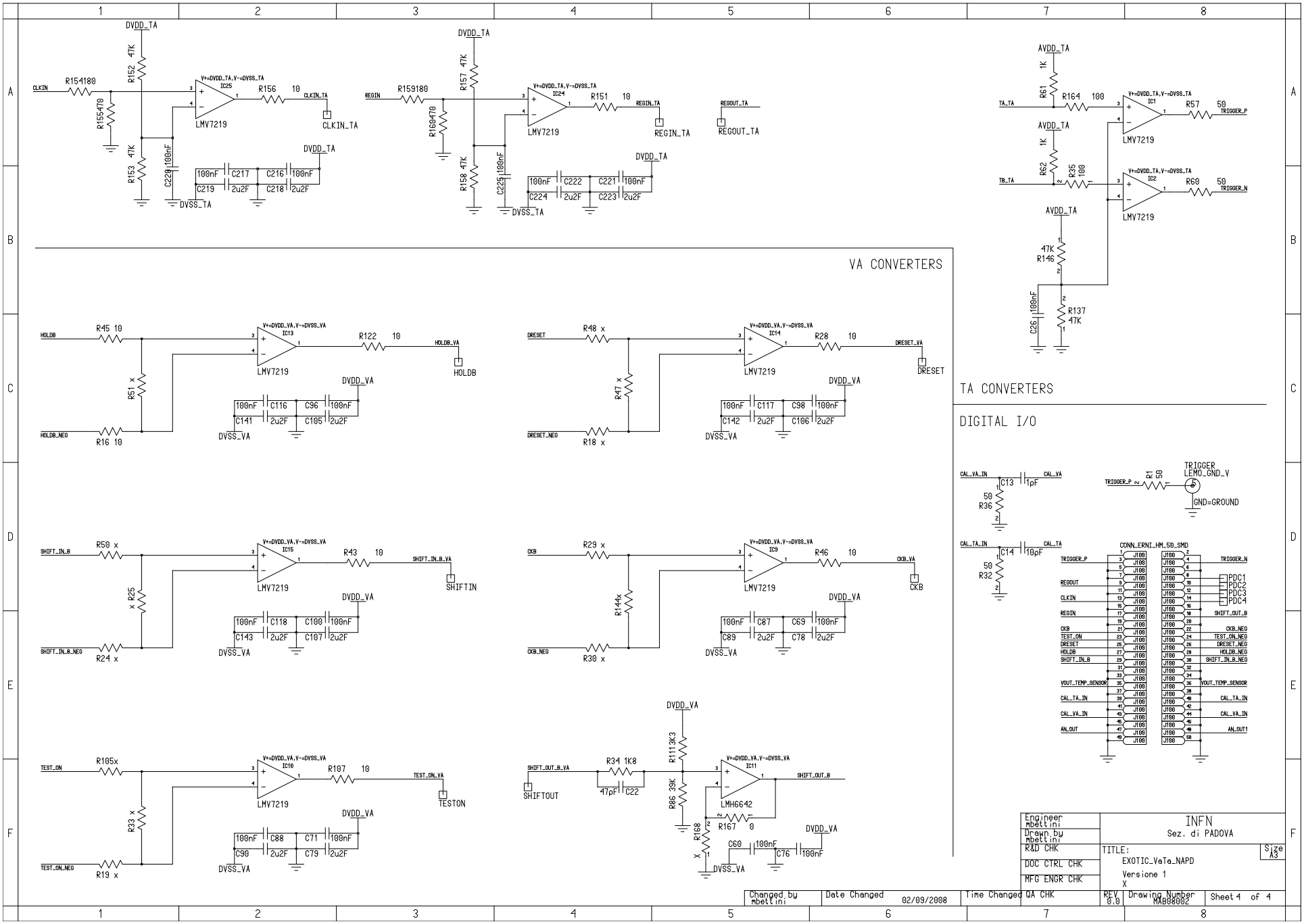
VA CONVERTERS
TA CONVERTERS
DIGITAL I/O
CLKIN
R154 180
R155 470
R152 47K
R153 47K
C229 100nF
LMV7219
R156 10
CLKIN_TA
REGIN
R159 180
R160 470
R157 47K
R158 47K
C225 100nF
R151 10
REGIN_TA
REGOUT_TA
AVDD_TA
DVDD_TA
DVSS_TA
TA_TA
TB_TA
R61 1K
R62 1K
R164 100
R35 100
R146 47K
R137 47K
C26 100nF
R57 50
R60 50
TRIGGER_P
TRIGGER_N
HOLDB
R45 10
R51 x
R16 10
HOLDB_NEG
R122 10
HOLDB_VA
DVDD_VA
DVSS_VA
DRESET
R48 x
R47 x
R18 x
DRESET_NEG
R28 10
DRESET_VA
SHIFT_IN_B
R50 x
x R25
R24 x
SHIFT_IN_B_NEG
R43 10
SHIFT_IN_B_VA
SHIFTIN
CKB
R29 x
R144x
R30 x
CKB_NEG
R46 10
CKB_VA
TEST_ON
R105x
R33 x
R19 x
TEST_ON_NEG
R107 10
TEST_ON_VA
TESTON
SHIFT_OUT_B_VA
SHIFTOUT
R34 1K8
47pF C22
R111 3K3
R86 39K
LMH6642
R167 0
R168 x
C60 100nF
C76 100nF
SHIFT_OUT_B
CAL_VA_IN
C13 1pF
R36 50
CAL_VA
CAL_TA_IN
C14 10pF
R32 50
CAL_TA
TRIGGER_P
R1 50
TRIGGER LEMO_GND_V
GND=GROUND
CONN_ERNI_HM_50_SMD
PDC1
PDC2
PDC3
PDC4
VOUT_TEMP_SENSOR
AN_OUT
AN_OUT1
Engineer mbettini
Drawn by mbettini
R&D CHK
DOC CTRL CHK
MFG ENGR CHK
INFN
Sez. di PADOVA
TITLE:
EXOTIC_VaTa_NAPD
Versione 1
X
Size A3
Changed by mbettini
Date Changed 02/09/2008
Time Changed
QA CHK
REV 0.0
Drawing Number MAB08002
Sheet 4 of 4